The Role of Information Operations in Strategy, Conventional War and Low Intensity Conflict

By Patrik Thomé, Major, Swedish Army

Editorial Abstract: Major Thomé emphasizes how detailed operational center of gravity analysis is critical to both conventional and effects-based strategies. He contrasts the use of Information Operations in different parts of the conflict spectrum, using case studies from the Falklands War, and the war in Algeria.

Introduction

This article considers the differences between Information Operations utilization in conventional war versus low intensity conflict. Analysis of operational planning in the 1982 Falklands War and the 1954-1962 war in Algeria illustrates these distinctions, and highlights implications for future operational planning.

How Operational Art Relates to Strategy

Application of operational art depends on the chosen strategy. A direct strategy attempts to force a decision by mainly military means, through a direct or indirect approach, and often results in conventional war. An indirect strategy attempts to force a decision using means other than a purely military victory, though with military forces playing a subordinate or supporting role. This in no way excludes the use of military means to wage a conventional war. Indirect strategy aims to coordinate the reciprocating effect of the different means of power, so that political authorities can reach their chosen objectives. The reciprocating effect describes how different means of power have different roles at any given point in time. The two main factors influencing the choice of strategy are each side's degree of freedom of action, and the means of power at each parties' disposal. If military means are limited compared to one's counterpart, an indirect strategy is appropriate—which is often the case when it comes to low intensity conflict.

As means of power, military force is both available and usable at the strategic level. Effective implementation demands all means must be coordinated within an overall strategy. This has implications at the operational level, since all means must be coordinated to form a coherent whole. Figure 1 illustrates a strategic plan coordination model.

During each phase, each line of operation is aimed at affecting an operational Center of Gravity (CoG). Sequential decisive points (DP) along each line show relative progress. The aim is to create preconditions for mutually supportive use of the different means of power. The operational CoG can be different or common for more than one means of power. Thus, different means of power can affect several operational—or one strategic—enemy CoG. This in turn contributes to attaining well-defined strategic maneuver room, where one can chose an

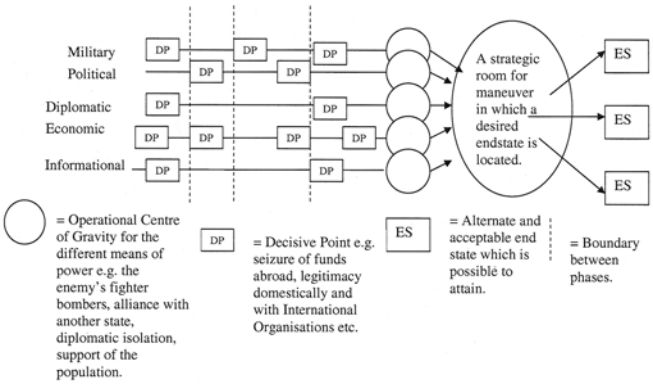

Figure 1. Strategic Plan Coordination Model

acceptable end state. Different end states must be prioritized, acceptable, and attainable at an acceptable cost.

Operational Art and Conventional War, The Falklands 1982

Great Britain's desired strategic end state was reinstatement of UK sovereignty over the Falkland Islands. The Argentinean strategic end state *ought* to have been imposition of Argentinean sovereignty, based on the following military operational end states: the Falkland Islands and South Georgia shall be under the control of our own ground forces, and our own air and maritime forces shall control the Total Exclusion Zone (TEZ). The enemy's land forces on the islands shall be defeated, and their air- and maritime forces shall not be able to influence the islands from areas within the TEZ.

Up to the time of the amphibious landing, the British operational CoG was their maritime task force, specifically their two aircraft carriers. The operational CoG changed to the ground forces (3rd Commando Brigade) after the amphibious landing. The Argentine operational CoG was their fighter-bomber force, but following British amphibious landings, the Argentine operational CoG became their ground forces defending Port Stanley.

CoG analysis using Joe Strange's model and methods shows the operation's decisive points, with results for Britain presented in Table 1. Each critical vulnerability transforms into a DP. For example, the critical vulnerability "insufficient supply of chaff" becomes "increase the production of chaff and distribute them to the maritime force." Another critical

Physical Center of Gravity	CC – Critical Capabilities
The British maritime force with the two Carriers.	• Establish temporary air supremacy. • Prevent Argentinean reinforcements. • Protect the Amphibious Force.
CR – Critical Requirements	**CV – Critical Vulnerabilities**
• Access to the US base at Ascension Island. • The ability to bunker at sea. • A sufficiently large number of Sea Harriers in order to be able to establish temporary air supremacy. • Uphold a blockade by interdicting maritime targets. • Prevent aircraft from landing at Port Stanley. • Air Defense coverage over the amphibious landing area. • Prevent the enemy's Air to Sea Missiles from hitting their target. • Prevent the Argentineans from locating the maritime force. • Support from a domestic public opinion and from the international community.	• Political will of the USA to give access to the base. • Civilian tankers. • If enough aircraft losses can be accomplished. • Range of sensor- and weapon-systems. • The possibility to base ships with AD-systems within range of the landing strip. • The AD fire-control systems of escorting ship. • Insufficient supply of chaff. • No control of the press and media. The necessity to use one owns radar- and communication-systems. • Large own losses. Disagreement within the Cabinet.

Table 1. An Analysis of the British CoG according to Strange's "CG-FF-CR-FV" model

vulnerability, signals intelligence (SIGINT), transforms into a DP stating "neutralize the naval SIGINT vessel and Boeing 707 aircraft-based SIGINT."

Consequences for the Operational Planning in Conventional War

Operational planning starts with the assumption that the physical CoG is the military force or unit with the ability to most effectively affect the enemy. Operational planning focuses on affecting critical capabilities which support both friendly and as enemy CoGs. Air operations are dominated by achieving air supremacy. Maritime operations, and to some extent land operations, are conducted in order to secure own lines of communication while at the same time denying the enemy the opportunity to use theirs. The dominating factor in land operations is to maneuver in order to control key terrain. The main focus of the operational planning process is to coordinate land, maritime, air, and logistical operations. Logistics is of paramount importance, as high intensity of combat, combined with support requirements, defines how and with what limitations one can employ forces. Information Operations (IO) are mainly conducted as traditional command and control warfare (C2W) where they principally support land, maritime and air forces in getting inside the enemy's OODA (observe, orient, decide, act) Loop. Intelligence operations support land, maritime and air forces in achieving information superiority. This in turn makes it possible to employ physical destruction of the enemy while avoiding physical destruction of our own forces. The intelligence situation is characterized by duels between different technical systems. Additionally, Special Operations Forces (SOF) are deployed to support intelligence operations, or to strike targets which cannot be destroyed by traditional forces. Cooperation between civilian and military entities primarily supports operations, such as leasing means of transportation or infrastructure. Figure 2 shows a broader "between-the-operational-lines" perspective of this reciprocal relationship.

Operational Art in Low intensity Conflict, Algeria

The desired political end state for the Front de Liberation Nationale (FLN) was to overthrow the government and assume power in Algeria. The operational end state *could* have been to develop a firm political infrastructure which France would not be able to affect with military means. This operational end state was confined to the low intensity part of the conflict, or what Maoist theory calls the "strategic defensive." If the FLN had built a complete strategy based on Mao's theories concerning insurrections, they would have formulated new operational end states for the remaining two campaign phases: strategic stalemate, and strategic counteroffensive. These

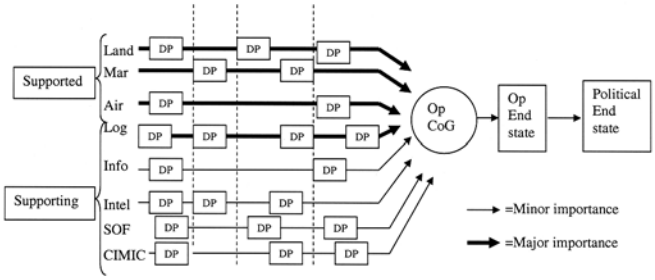

Figure 2. Operational Relationships - Conventional

Physical Center of Gravity	CC – Critical Capabilities
10. Paratroop division	• Capabilities to achieve local superiority with, in relation to the enemy, qualitatively better units. • Capability to pursue and neutralize guerrilla units. • Capability to coordinate civilian and military resources.
CR – Critical Requirements	**CV – Critical Vulnerabilities**
• Intelligence of high quality. • Support of the populace. • Domestic political support. • High operational mobility. • Social and political reform. • Joint command and control of military and civilian assets (SAS-Special Administrative Service). • Local defense units tied to the villages.	• Recruitment of local indigenous agents ("Harkis"). • Informers among the populace. • Own terror. • Forced movement of the population. • Public opinion in France. • Access to large helicopter units. • The "Colons" refusal to accept shared power. • Availability of Arabic-speaking interpreters. • Cultural "one-eyedness". • Recruitment of villagers.

Table 2. An Analysis of the French CoG according to Strange's "CG-CC-CR-CV" model

operations would have placed greater emphasis on the military means of power, and particularly the strategic counteroffensive. France's initial strategic objective was to restore conditions that prevailed before the insurrection started in 1954, without entering into any form of compromise. France's strategic objective underwent a change during 1961, which led to termination of the war in 1962. The French would have achieved their operational end state when they no longer needed military means to maintain an acceptable security situation, and local law enforcement had taken over security responsibilities. The initial French operational end state consisted of using conventional forces to destroy the insurrection's political and administrative organization. Subsequently, the end state became creation of a firm political and ideological base, as a prerequisite for transforming the population and moving them away from revolutionary ideology. Finally, the French operational end state became implementation of political, social and economic reforms. This would enable them to organize a new social and administrative system, and secure the population's active part in the struggle against the insurrection. Notably, France could only achieve its initial operational end state through primarily military means. In the consecutive phases, they mainly employed political and economic means of power, which consequently has to have been coordinated with the military operations.

During the initial campaign phases, guerilla units and their political support organizations made up the Algerian operational CoG. The French operational CoG was the elite 10th Paratroop division, whose rapid mobility could pursue and destroy the guerrillas and insurgent political cadre.

Again using Strange's model, we transform critical vulnerabilities into decisive points and highlight significant elements (Table 2). An example vulnerability is the cultural "one-eyedness" which prevailed among the Special Administration Section (SAS), which in turn led to an inability to understand the Algerians. *(Editor's note: the French army increased their role in local Algerian administration through the SAS, whose mission was to establish contact with the Muslim population and weaken nationalist influence by asserting French presence.)* This would be transformed into the decisive point of achieving a cultural awareness among SAS personnel. Another example is "cross-border movement by land and sea" which transformed into the decisive point "construct the Pedron and Morice lines at the Moroccan and Tunisian borders."

Operational Planning Consequences in LIC

From a methodological standpoint, there are no differences in the way we treat operational CoGs and DPs in either type of warfare. The ability to coordinate friendly civil and military assets, while at the same time preventing the enemy from reinforcing or establishing an administration, is a crucial capability for both sides. Operational planning focuses on coordinating IO, intelligence, and SOF, all supported by the other lines of operation. A critical requirement (CR) common to both sides in a LIC is the support of the populace. Information Operations are conducted with an emphasis on Psychological Operations (PSYOP). These are primarily targeted at the populace, and not against enemy combat units. High quality intelligence is another CR for successfully defeating an insurgency, though not primarily based on technical surveillance systems as in conventional war, but instead on a duel between human intelligence (HUMINT) assets. Land and air operations primarily support intelligence operations by large-scale ground surveillance throughout the area of operations (AOR), and concentrated on the border areas. Normally, only the stronger side in a LIC has the capability to conduct air and maritime

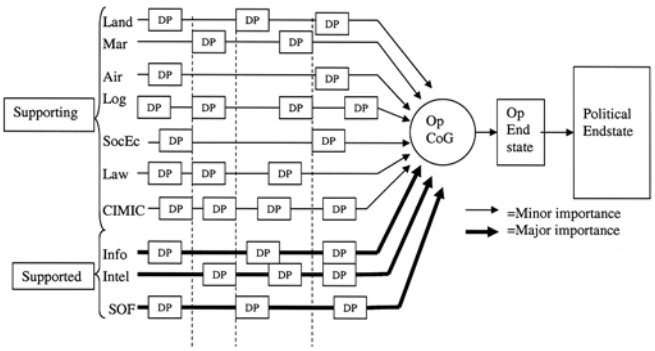

Figure 3. Operational Relationships - LIC

operations. Offensive airpower is often limited due to the risk of collateral damage. However, where forces can reduce the risk, or when the enemy concentrates his forces, close air and ground units coordination can be most effective, as was the case in Algeria. Maritime operations primarily focus on prevention of arms smuggling or other contraband, or to protect harbors and infrastructure from sabotage. Due to the relatively low intensity of the conflict, logistics can rely largely on civilian society. Consequently, military logistical limitations will have limited impact on military operations. SOF will provide some intelligence gathering, but are primarily aimed at defeating enemy units and neutralizing enemy civilian administration. One of the best known examples is the "Phoenix" during the war in Vietnam. Furthermore, other civilian lines of operation must supplement traditional military lines of operations. For instance, a law enforcement line of operation could coordinate civilian police and security service activities such as obtaining intelligence, making arrests and rounding up suspects. Another necessary line of operation is sociological-economic, in order to synchronize reforms in these areas with military operations. Military-civilian coordination generally supports the civilian administration's implementation of reforms, or other measures of a sociological-economic nature. A more recent example is the Task Force Baghdad 2004 Campaign Plan, which synchronized two traditional lines of operation, combat operations; and train & employ Iraqi security forces, with three additional lines of operation: restoration of essential services; promote governance; and economic pluralism. IO constituted the sixth line of operation, being an integral part of the other five lines.

Figure 3 shows a broad perspective reciprocal relationship between lines of operation in a LIC.

Implications of the Differences Between Conventional War and LIC

In conventional war as well as in low intensity conflict, units on both sides with the most striking power comprise the physical operational CoG. Several military theorists consider the will of the population to be a general CoG, especially in LIC. At the operational level, one must consider the will of the population a critical requirement, equally important to both sides. This is also the case when it comes to conventional war. The difference is one's own public opinion constitutes an operational critical requirement in conventional war. The military end state in conventional war is to make the enemy defenseless by destroying his means to resist, thereby influencing his will to continue fighting. This in turn will make it possible to implement political measures such as negotiations or a truce. Similarly, the stronger part of low intensity conflict is where one uses political measures to implement social reform. Alternately, in the weaker phase the aim is to avoid placing oneself in a defenseless state, rather than trying to render the enemy defenseless. This is an important distinction between the two forms of conflict. Another major difference is the time factor: it is difficult to estimate campaign duration, which in turn makes it hard to set time limits on major operational phases. Further, one must coordinate the military means of power with different civilian activities to a much greater extent in low intensity conflict. As a consequence, operational staffs must have a greater range of civilian competencies compared to conventional war, where most civil-military coordination on balancing the means of power takes place at the strategic level. An alternative is to have the operational staff make numerous iterative checks with the strategic command. This in turn may lead to the strategic command running the risk of having to make operational decisions regarding the other means of power. This would be most unfortunate from a methodological perspective, since it might delay the decision-making processes at all levels of command. The synchronization and coordination of interagency responsibilities at the operational level is one of the essential thoughts behind the concept of Effects Based Operations (EBO). When implementing this effects based line of thinking, it is important for us to use and maintain traditional operational CoG approaches, less we risk losing our operational focus. These case studies show relationships and relative importance among of lines of operation constitute the major difference between operational planning in conventional and low intensity conflict. This is especially true when it comes to IO. The role of Information Operations in low intensity conflict, augmented by effective interagency coordination, is paramount.